ITEM NO.	PART NUMBER	DESCRIPTION	DRAWING #	QTY.
1	BO-1/4x3/4 BHCS	BUTTON HEAD CAP SCREW 1/4x3/4	STOCK	2
2	BO-1/4 CLIP ON NUT	CLIP ON NUT 1/4	STOCK	2
3	BO-8-32x1/2 MS SS	MACHINE SCREW 8-32x 1/2	STOCK	2
4	BO-8/32 HN SS	8-32 STAINLESS STEEL MACHINE SCREW NUT W/ TOOTH WASHER	STOCK	2
5	EL-426-18 GROMMET	TAIL LIGHT 4" ROUND GROMMET	STOCK	6
6	EL-B150-18 GROMMET	CLEARANCE LT GROMMET	STOCK	7
7	EL-BU-4-LED BACKUP	BACK UP LIGHT 4" ROUND LED	STOCK	2
8	EL-HB-LK-BL	HEADACHE RACK BADGE LIGHT ASSEMBLY	11-0005-01	1
9	EL-HB-LK-SL	HEADACHE RACK SIDE LIGHT ASSEMBLY	11-0005-02	2
10	EL-M400	LICENSE LIGHT HYDRA BED	STOCK	1
11	EL-M-A-LED MARKER AM	LED AMBER CLEARANCE LIGHT	STOCK	2
12	EL-M-R-LED MARKER RE	LED RED CLEARANCE LIGHT	STOCK	5
13	EL-PL-HR-200	HARNESS, HEADACHE RACK, MAIN	STOCK	1
14	EL-PL-HR-DT	HARNESS, HEADACHE RACK, DRIVER SIDE	STOCK	1
15	EL-PL-HR-WL	HARNESS, HEADACHE RACK, WORK LIGHT	STOCK	1
16	EL-STT-4-LED STOP TA	STOP/TURN/TAIL, LIGHT 4" ROUND LED RED	STOCK	4
17	FP-HR NAME BADGE PS	HEADACHE RACK NAME BADGE "PRO SPEAR"	15-2301	1
18	HD-CB .5x1.5	STEEL BODY CLIP LARGE	STOCK	4
19	HD-VSH-4-75 VELCRO	VELCRO HOOP WITHOUT ADHESIVE 4	STOCK	1
20	HD-VSL-4-75 VELCRO	VELCRO LOOP WITH ADHESIVE 4	STOCK	1
21	PS-PS-D549 HY-TD	HYDRAULIC INSTALLATION, PRO SPEAR DELUXE 550	16-0554	1

	REVISIONS		
REV.	DESCRIPTION	DATE	APPROVED
A	INITIAL RELEASE	6/3/2014	

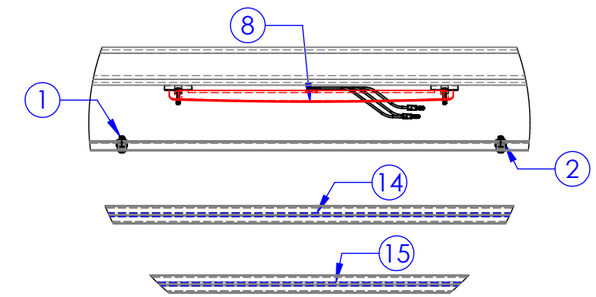

DETAIL A
SCALE 1 : 8
WITH OUT NAME BADE

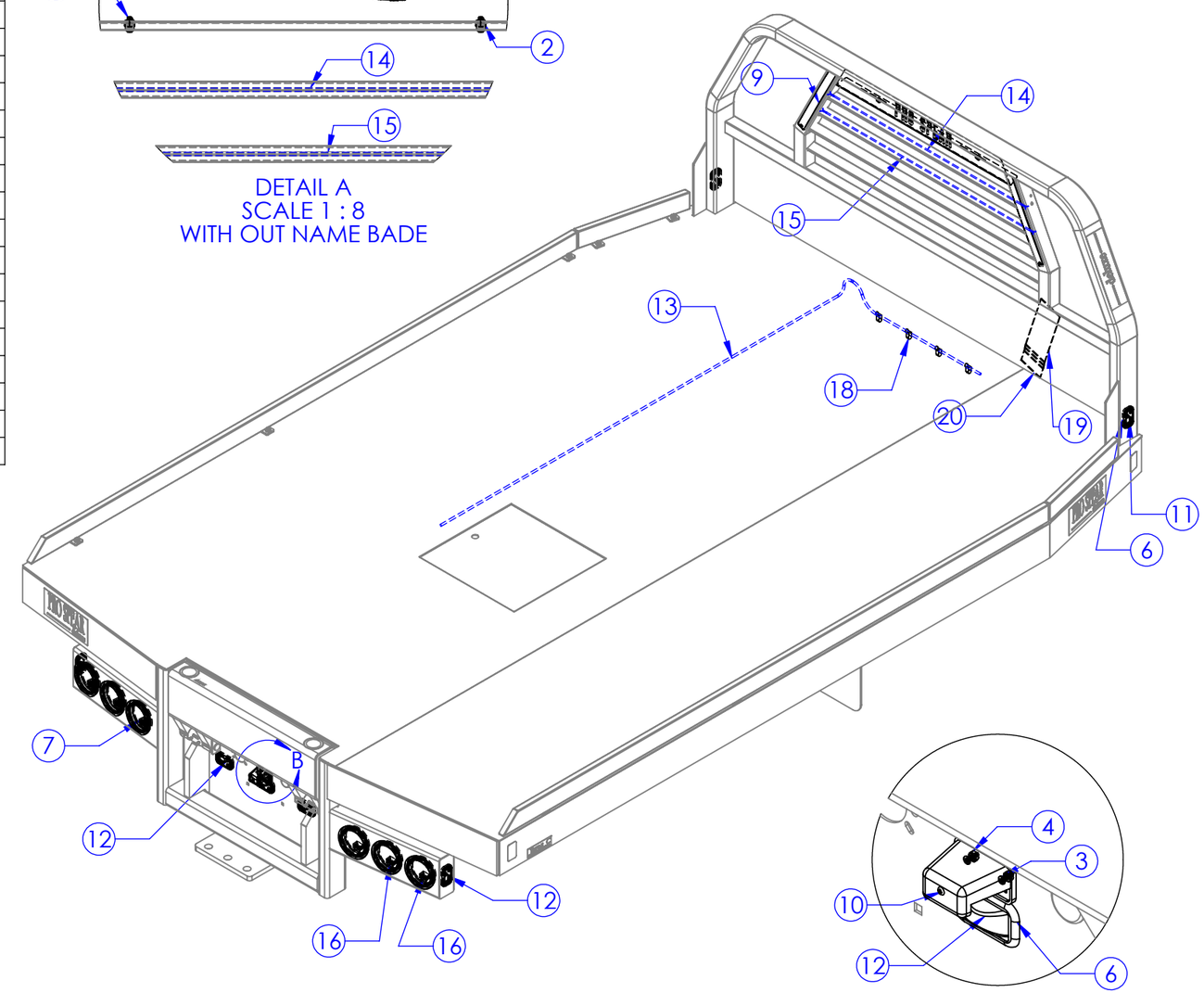

DETAIL B
SCALE 1 : 5

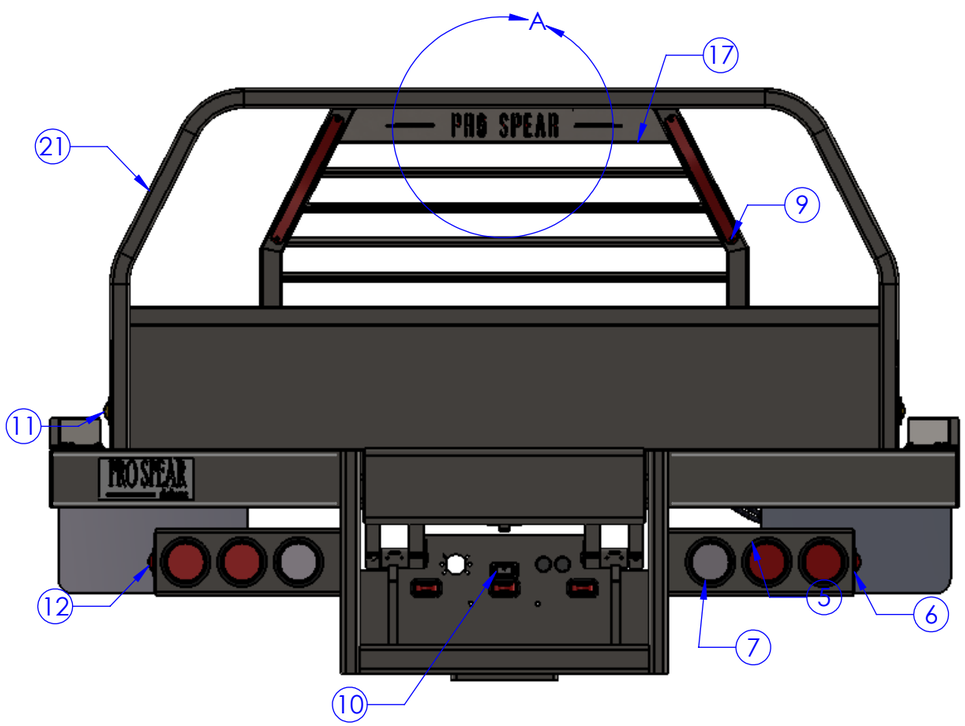

PROPRIETARY AND CONFIDENTIAL

THE INFORMATION CONTAINED IN THIS DRAWING IS THE SOLE PROPERTY OF <INSERT COMPANY NAME HERE>. ANY REPRODUCTION IN PART OR AS A WHOLE WITHOUT THE WRITTEN PERMISSION OF <INSERT COMPANY NAME HERE> IS PROHIBITED.

UNLESS OTHERWISE SPECIFIED:

DIMENSIONS ARE IN INCHES
TOLERANCES:
FRACTIONAL ±1/16
ANGULAR: MACH ± 1 BEND ±
TWO PLACE DECIMAL ±010
THREE PLACE DECIMAL ±005

MATERIAL

DO NOT SCALE DRAWING

	NAME	DATE
DRAWN	HEATH	6/11/2014
PART #		
ASM #	PS-PS-D549 HY-L-TD	

COMMENTS:

PRO SPEAR
DELUXE 550 LIGHT
INSTALLATION

P.O. BOX 248, SABETHA KS. 66534
(785) 284-3674 FAX (785) 284-3931

TRIPLE C INC.

SIZE	DWG. NO.	REV
B	16-0555	A

SCALE: 1:16 | WEIGHT: 1767.55 | SHEET 1 OF 1